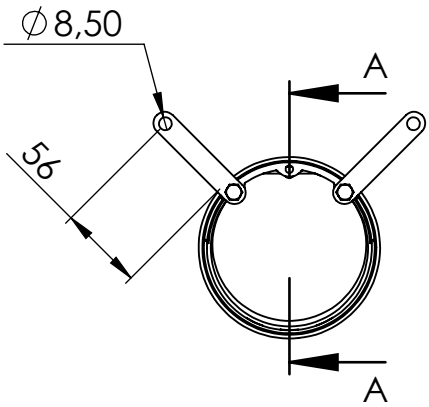

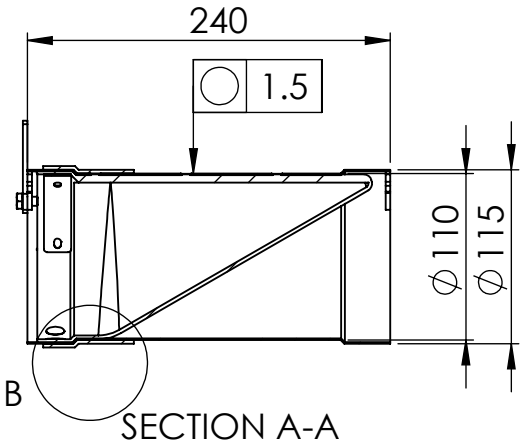

DETAIL B
SCALE 1 : 2

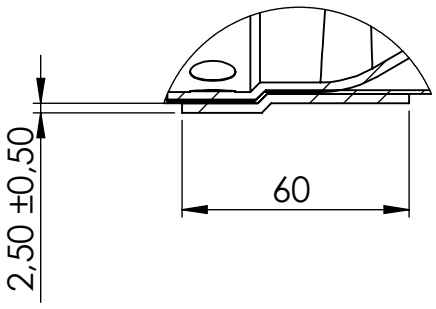

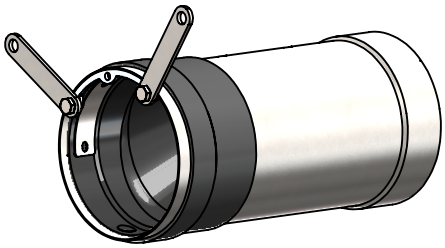

Designed By	Approved By	Created Date	Units	General Tolerance	Scale
PM	MP	2015-07-03	[mm]	SS-ISO 2768-1 c	1:5

Material	Comments	Project Number
EN 1.4301 / EN 1.4404		

Weight [kg]	Box Volume [m³]
1,77	0,003

Description

WaStop DN120

Mounting tabs and rubber seal

Article Number	Rev	Sheet
WS116-45/55/65-304/316		1 (1)

www.wapro.com

© 2016 Wapro AB. This document is subject to copyrights owned by Wapro AB. Any amendments, republication, retransmission, and/or reproduction of all or any part of the document is expressly prohibited, unless the copyright owner of the material has expressly granted it's prior written consent. All other rights are reserved.

Wastop Inline Check Valve Technical Specification
Stainless Steel AISI 304/316 Series

Art. No: WS116-45-XXX / WS116-55-XXX / WS116-65-XXX
Nominal size: DN 125
Material
Pipe: Stainless Steel AISI 304/316
Membrane: Silicone
Fasteners: Marine grade stainless steel (AISI 316)

Technical data:	Soft (45)		Standard (55)		Hard (65)	
Max. back pressure [1]:	3	mH_2O	5	mH_2O	8	mH2O
Horizontal opening pressure [1]:	160	mmH_2O	175 [2]	mmH_2O	195 [2]	mmH_2O
Horizontal closing pressure [1]:	80	mmH_2O	110 [2]	mmH_2O	125 [2]	mmH2O
Submerged opening pressure [1]:	135 [2]	mmH_2O	155 [2]	mmH_2O	175 [2]	mmH_2O
Submerged closing pressure [1]:	50 [2]	mmH_2O	55 [2]	mmH_2O	65 [2]	mmH_2O
Vertical opening pressure [1]:	215 [2]	mmH_2O	260 [2]	mmH_2O	285 [2]	mmH_2O
Vertical closing pressure [1]:	85 [2]	mmH_2O	135 [2]	mmH_2O	150 [2]	mmH_2O

[1] +/- 15% *[2] Modeled value*

- Values measured from bottom of pipe.

- Tests performed at room temperature (16-20°C).

Max. flow	m/s	l/s
	2	25

-Higher flows requires custom valve, contact Wapro

-Flange installation is highly recommended at flows above 2m/s

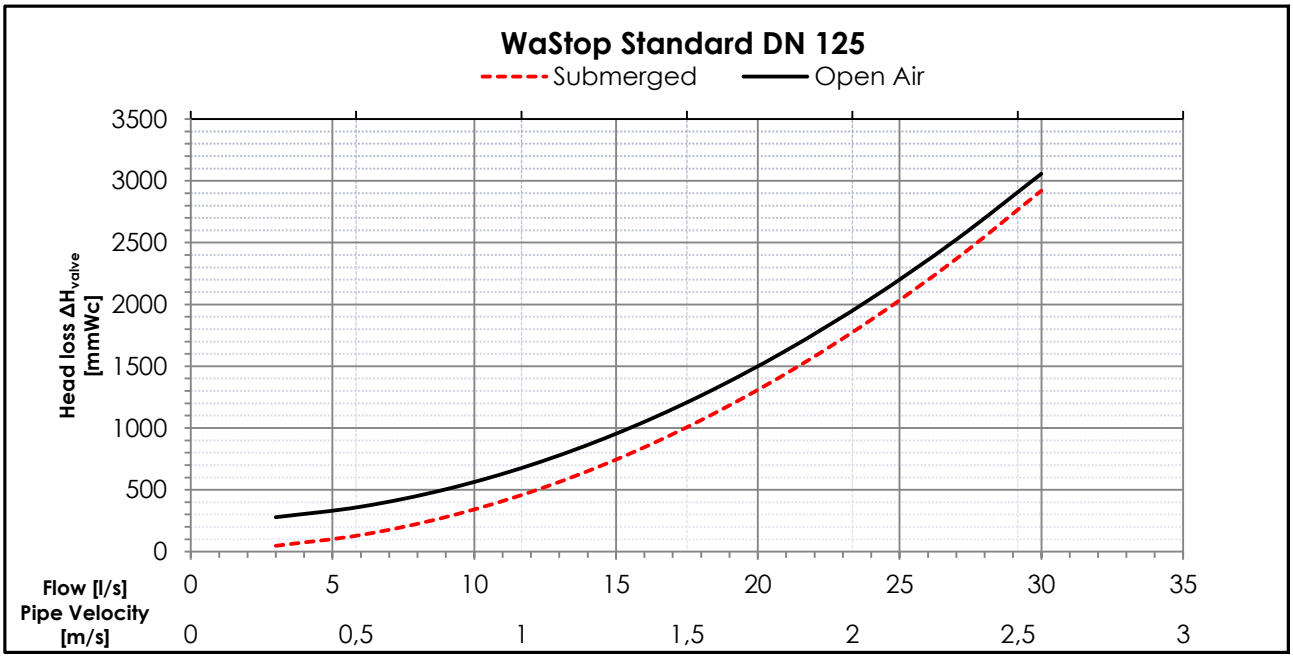

- Modeled headloss

Wapro AB
Munkahusvägen 103
SE-374 31 Karlshamn
Sweden

Tel: +46 454 185 10
Fax: +46 454 123 38
Email: wapro@wapro.com
Website: www.wapro.com

Reg.no 556 352 14 66
VAT no SE 556 352 146604
Office: Karlshamn Sweden

Opening Pressures

Opening pressure [*mmH2O /inH2O*] is the difference between the water level upstream and the water level downstream in the submerged case and to the invert of the pipe in the open air case. The opening pressure data presented in the technical specifications is measured with reference points according to *Fig.1*. Testing of the opening pressure is performed at room temperature.

Head Loss

The head loss diagram presents an empirical model with test data from a third party institute. The reference points for the head loss tests are the same as the horizontal opening pressure. The head loss presented includes all head loss associated with the WaStop installed in an outlet either open air- or submerged outflow. In the case when the head loss of a particular outlet is known before the installation this head loss could be subtracted from the head loss presented in the technical specification for an accurate estimate of the head loss for the outlet after installation of a WaStop check valve. For more information about head loss contact Wapro.

Maximum Flow Velocity

Maximum flow velocity is a recommendation that yields the longest service life. Both velocity and volume flow refers to the flow in the pipe in which the WaStop is installed. Since the flow area of the WaStop is slightly smaller than the pipe, the actual max flow velocity through the WaStop is higher than the max flow velocity stated in the technical specification. If an application demands higher flow than stated in the technical specifications contact Wapro.

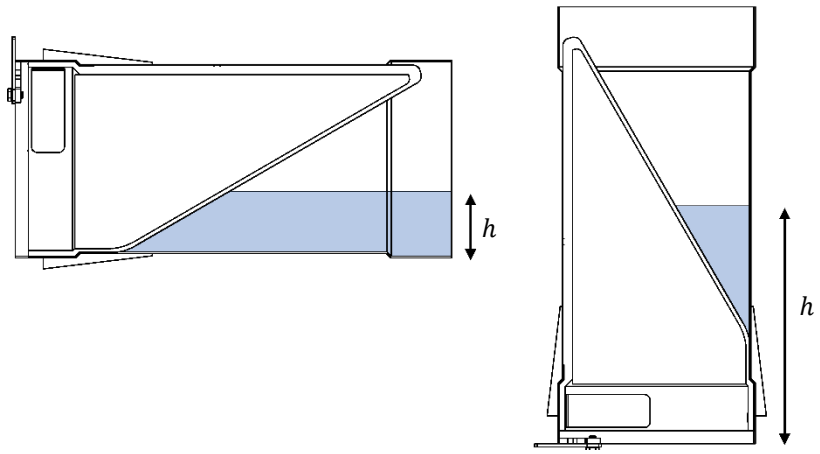

Figure 1. Reference point opening pressure horizontal and vertical.

Wapro AB
Munkahusvägen 103
S-374 31 Karlshamn
Sweden

Tel: +46 454 185 10
Fax: +46 454 123 38
Email: wapro@wapro.com
Website: www.wapro.com

Reg.no 556 352 14 66
VAT no SE 556 352 146604
Office: Karlshamn Sweden