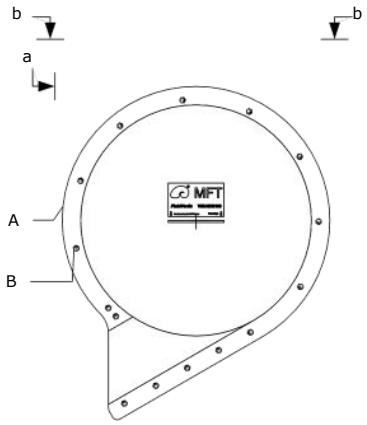


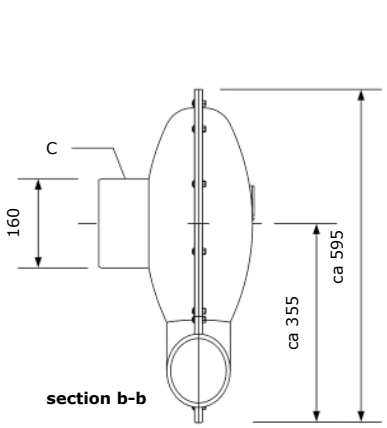


section b-b

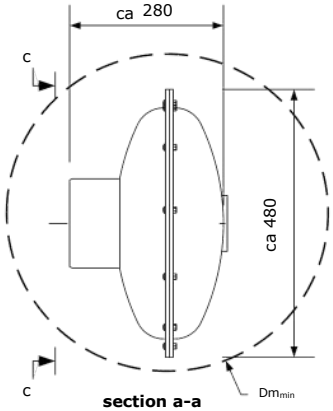


section a-a

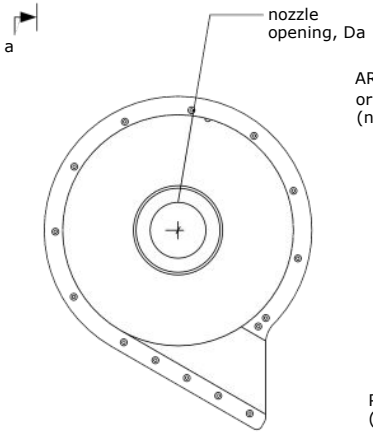


section c-c

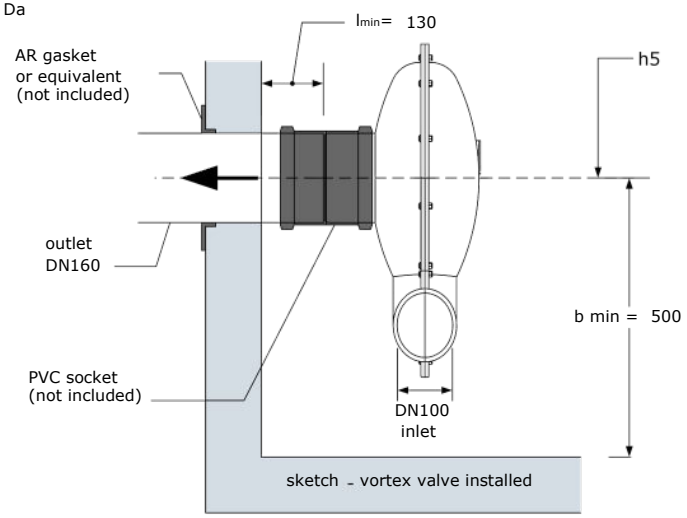


sketch - vortex valve installed

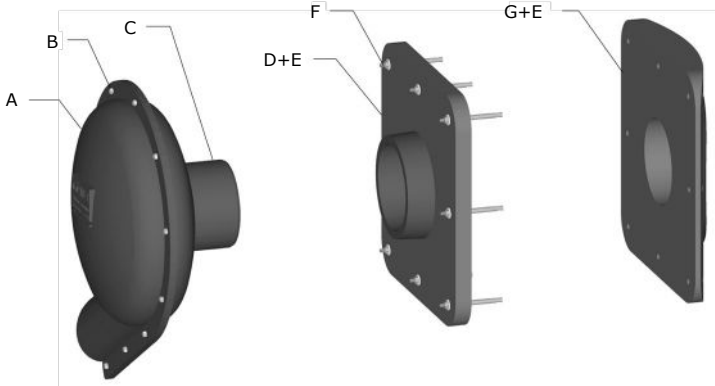


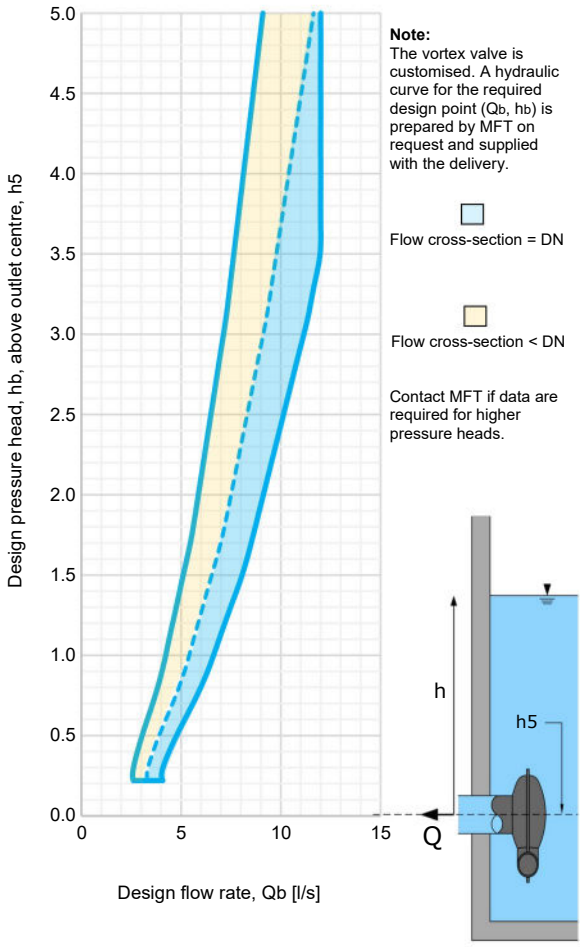


**Note:**
The vortex valve is customised. A hydraulic curve for the required design point (Qb, hb) is prepared by MFT on request and supplied with the delivery.

Flow cross-section = DN

Flow cross-section < DN

Contact MFT if data are required for higher pressure heads.

**Notes:**
1) Installation according to the installation instructions
2) All dimensions in [mm]
3) Customized product. Design criteria must be stated in the specification.

Min. manhole diameter: ø1000mm.

Min. installation opening, $DM_{min}$: ø600mm

**Parts list:**

| | | | |
|---|---|---|---|
| A | 1 pcs | Vortex housing | PUR |
| B | 8 pcs | Bolts | 316 |
| C | 1 pcs | Outlet, spigot | PUR |
| | | | |
| | | | |

**Accessories:**

| | | | |
|---|---|---|---|
| D | 1 pcs | Mounting plate | PUR |
| E | 1 pcs | Gasket | Foam |
| F | 8 pcs | Exp. bolts | 316 |
| G | 1 pcs | Filler piece | PE |

**Customised product Design criteria**

Design flow rate, Qb (l/s): _____

Design pressure head, hb (m):

_____

Outlet with spigot for connection to a socket, included as standard.

**Accessories:**

Mounting plate (Yes/No): ____

Filler piece for mounting plate adapted to manhole diameter,
Dk (m) : _____

# Datasheet

| | | |
|---|---|---|
| Product no.: VSU4DN100P-160 | | Product name: Vertical vortex valve FluidVertic VSU VSU4DN100P-160, PUR, CUSTOMISED |
| NRF no.: - | | |
| Version: 29-10-2026 | Page: 1 of 1 | Performance/Dimension: D-160 outlet (dim. 160 PVC spigot) |

MFT Pioneerer i regnvannshåndtering

**Copyright**
This drawing is protected by Norwegian copyright law and must not be copied, used or passed on to third parties without MFT's approval.

Miljø- og Fluidteknikk AS accepts no liability for any errors in its product information, data sheets, instructions, brochures or other printed material, and reserves the right to revise printed material and to modify its products without prior notice. This also applies to products included in confirmed orders, provided that the agreed specifications are not changed.

mft.no