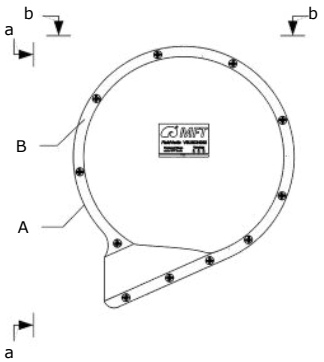

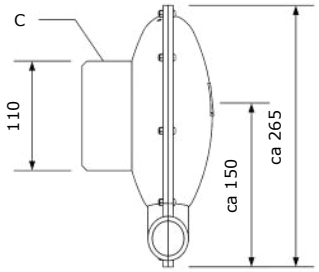

section a-a

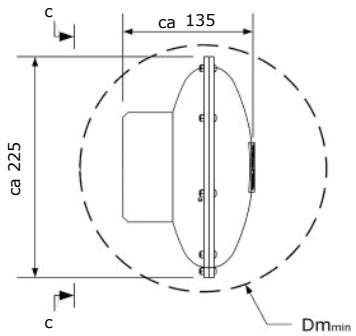

section b-b

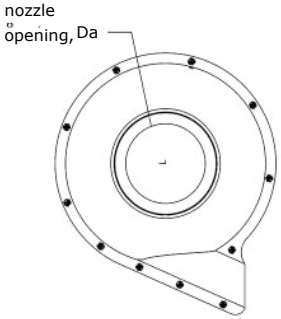

section c-c

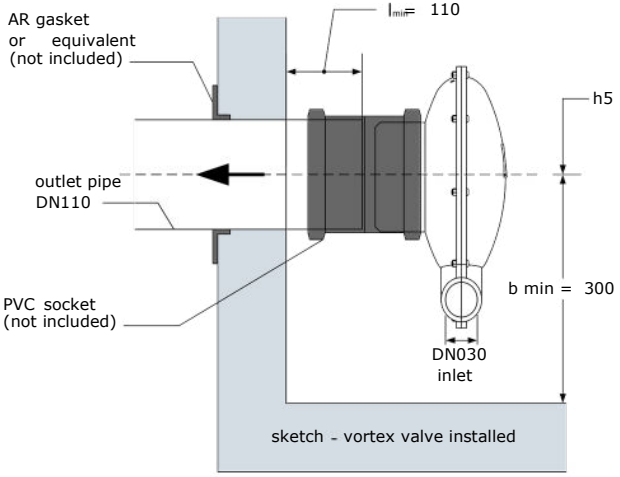

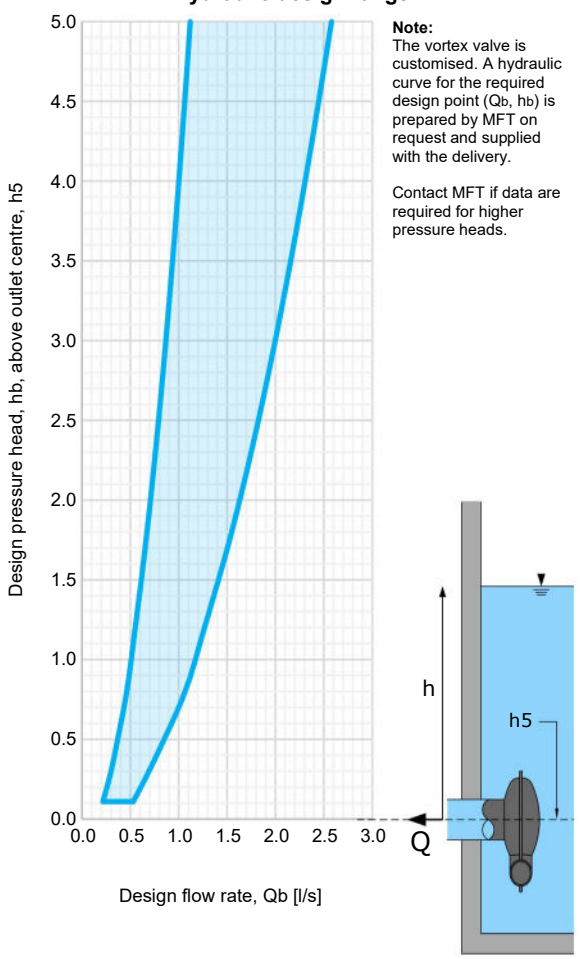

Note:
The vortex valve is customised. A hydraulic curve for the required design point (Qb, hb) is prepared by MFT on request and supplied with the delivery.

Contact MFT if data are required for higher pressure heads.

Notes:
1) Installation according to the installation instructions
2) All dimensions in [mm]
3) Customized product. Design criteria must be stated in the specification.

Min. manhole diameter: ø1000mm.

Min. installation opening, DM_{min}: ø300mm

Parts list:

A	1 pcs	Vortex housing	PUR
B	6 pcs	Bolts	316
C	1 pcs	Outlet, spigot	PUR

Accessories:

D	1 pcs	Mounting plate	PUR
E	1 pcs	Gasket	Foam
F	8 pcs	Exp. bolts	316
G	1 pcs	Filler piece	PE

Customised product Design criteria

Design flow rate, Qb (l/s): _____

Design pressure head, hb (m):

_____

Outlet with spigot for connection to a socket, included as standard.

Accessories:

Mounting plate (Yes/No): ____

Filler piece for mounting plate adapted to manhole diameter,
Dk (m) : _____

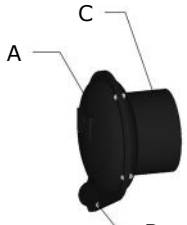

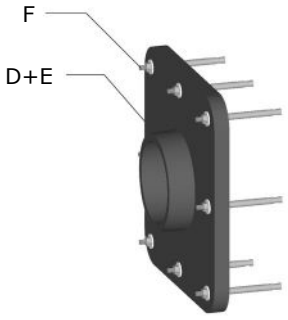

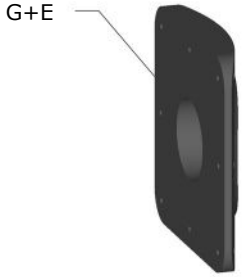

Datasheet

Product no.: VSU6DN032P-110	Product name: Vertical vortex valve FluidVertic VSU VSU6DN32P-110, PUR, CUSTOMISED
NRF no.: -	
Version: 29-10-2026 / Page: 1 of 1	Performance/Dimension: D-110 outlet (dim. 110 PVC spigot)

MFT Pioneerer i regnvannshåndtering

Copyright
This drawing is protected by Norwegian copyright law and must not be copied, used or passed on to third parties without MFT's approval.

Miljø- og Fluidteknikk AS accepts no liability for any errors in its product information, data sheets, instructions, brochures or other printed material, and reserves the right to revise printed material and to modify its products without prior notice. This also applies to products included in confirmed orders, provided that the agreed specifications are not changed.

mft.no